SIEMENS

Data sheet 3VA9157-0PK11

side wall mounted rot. operator standard IEC IP65 accessory for: 3VA10/11

Model	
product brand name	SENTRON
product designation	side wall-mounted rotary operator
accessories	Side panel rotary operating mechanism
General technical data	
protection class IP	IP65
Mechanical Design	
height	70 mm

Certificates

General Product Approval				EMV	Test Certificates
EG-Konf.	UKCA	Miscellaneous	EAC	RCM	Type Test Certificates/Test Report

Marine / Shipping	other			Environment	
LRS	Confirmation	Miscellaneous	Miscellaneous	Environmental Confirmations	EPD

Environment

Environmental Confirmations

Further information

Information on the packaging
https://support.industry.siemens.com/cs/ww/en/view/109813875
Information- and Downloadcenter (Catalogs, Brochures,…)
http://www.siemens.com/lowvoltage/catalogs
Industry Mall (Online ordering system)
https://mall.industry.siemens.com/mall/en/en/Catalog/product?mlfb=3VA9157-0PK11
Service&Support (Manuals, Certificates, Characteristics, FAQs,...)
https://support.industry.siemens.com/cs/ww/en/ps/3VA9157-0PK11
Image database (product images, 2D dimension drawings, 3D models, device circuit diagrams, ...)
http://www.automation.siemens.com/bilddb/cax_en.aspx?mlfb=3VA9157-0PK11
CAx-Online-Generator

Subject to change without notice
© Copyright Siemens

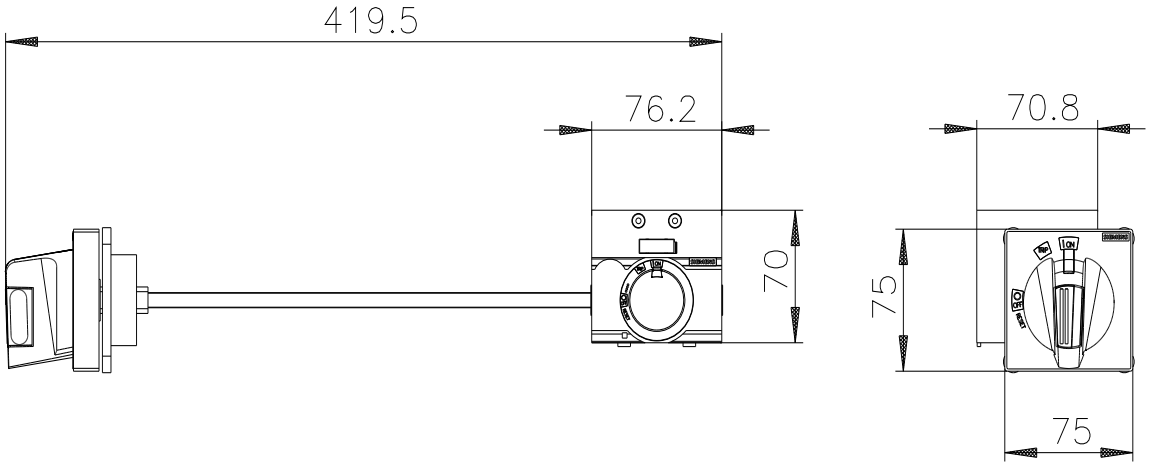

last modified: 8/10/2024

Subject to change without notice
© Copyright Siemens

Subject to change without notice
© Copyright Siemens